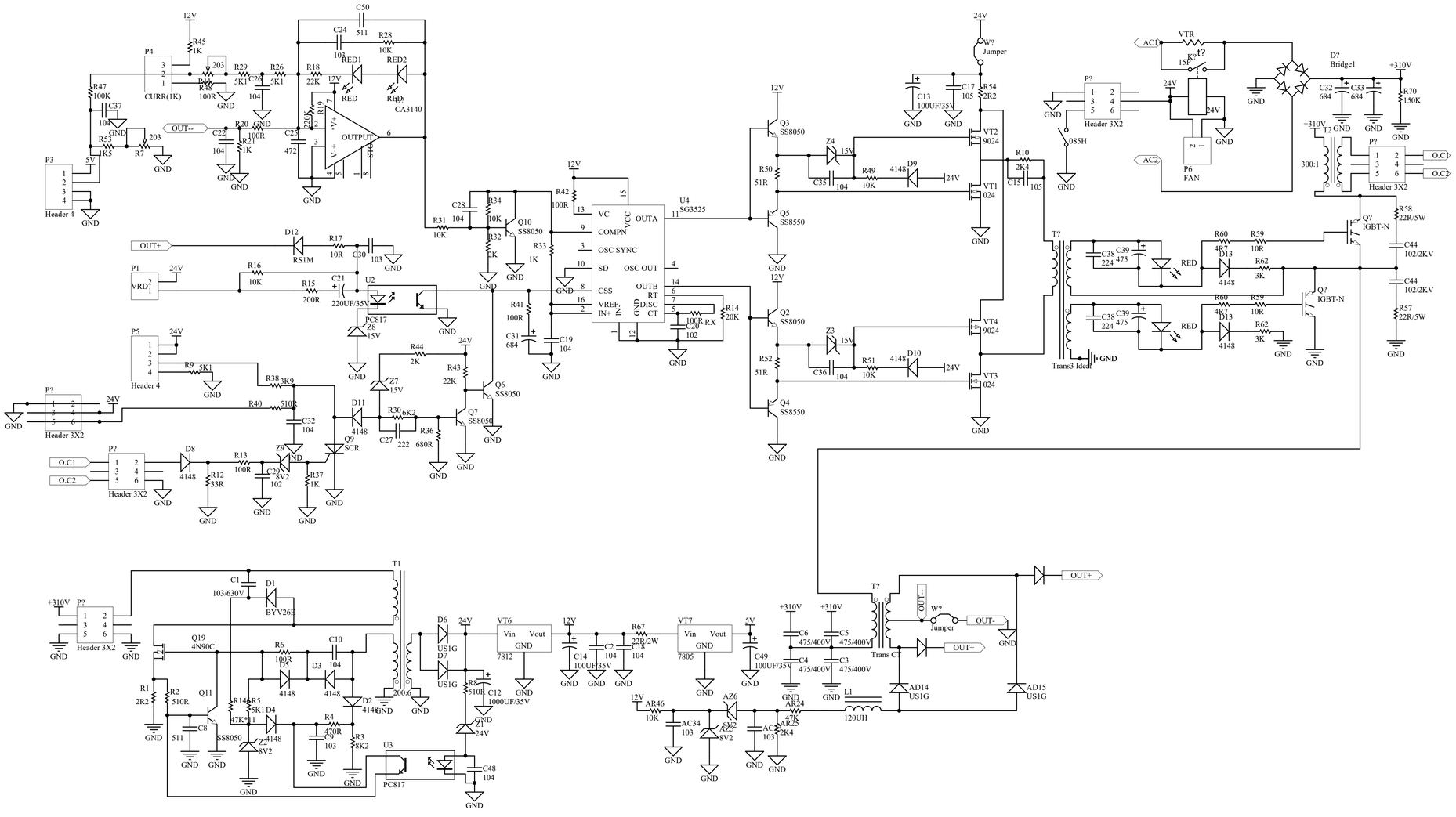

Title		
Size A2	Number	Revision
Date: 2016/7/4		Sheet of
File: E:\ \..\ .SCHDOC		Drawn By: